T1, T2: BC547, 2N2222 etc

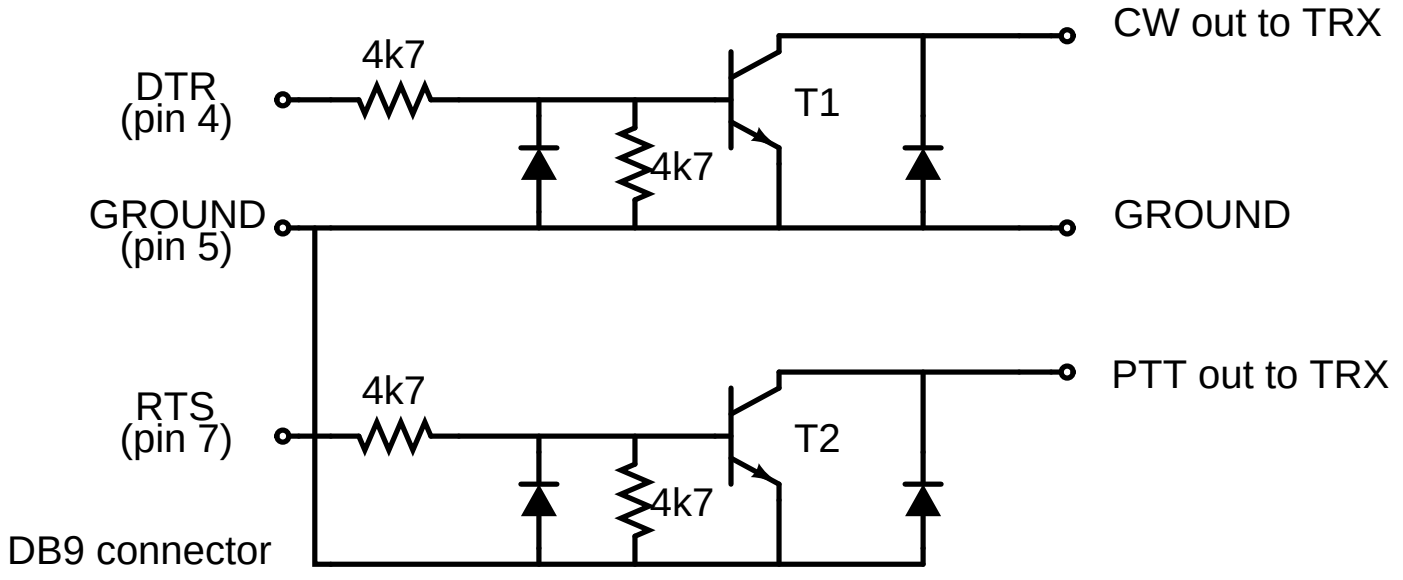

DIODES: 1N4148 etc